# Technical data sheet

Product features

| Chip scuttle heated from bellow 230 V / 1N | | |
|---|---|---|
| **Model** | **SAP Code** | 00004880 |
| UH 12 | **A group of articles - web** | Fryers and French Fries Holders |




| | | | |
|---|---|---|---|
| **SAP Code** | 00004880 | **Net Weight [kg]** | 6.00 |
| **Net Width [mm]** | 268 | **Power electric [kW]** | 0.350 |
| **Net Depth [mm]** | 351 | **Loading** | 230 V / 1N - 50 Hz |
| **Net Height [mm]** | 231 | | |



RM GASTRO, s.r.o.,
Třída Čs. armády 816,
391 81 Veselí nad Lužnicí 1, ID:49825062

# Technical data sheet

Technical drawing

| Chip scuttle heated from bellow 230 V / 1N | | |
|---|---|---|
| **Model** | **SAP Code** | 00004880 |
| UH 12 | **A group of articles - web** | Fryers and French Fries Holders |



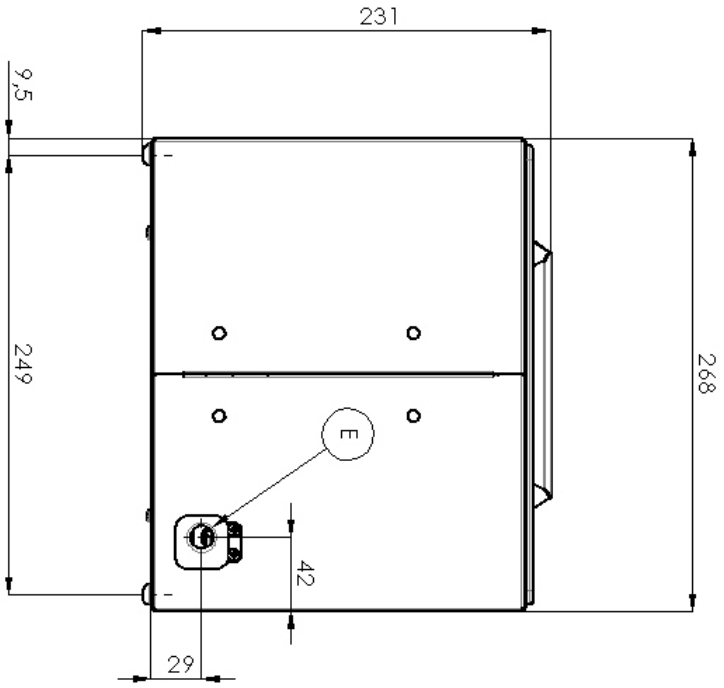


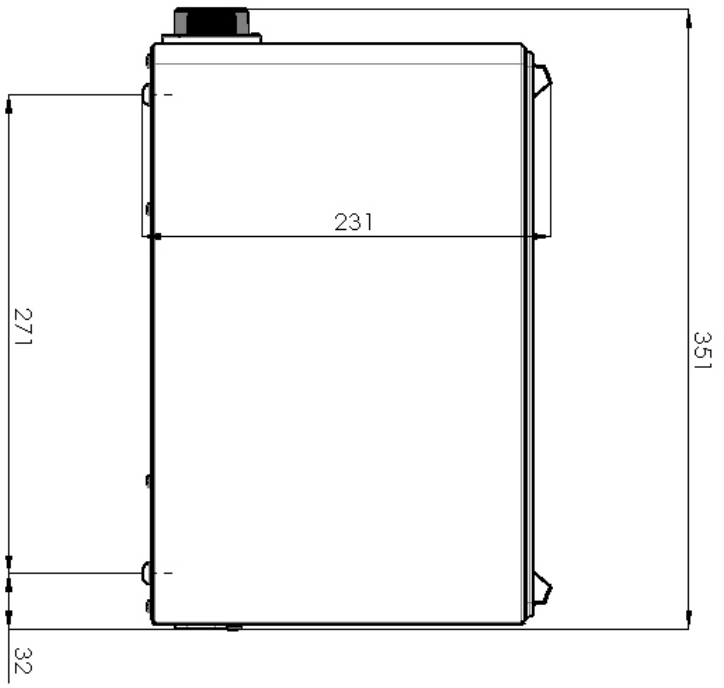




RM GASTRO, s.r.o.,
Třída Čs. armády 816,
391 81 Veselí nad Lužnicí 1, ID:49825062

# Technical data sheet

Product benefits

| Chip scuttle heated from bellow 230 V / 1N | | |
|---|---|---|
| **Model** | **SAP Code** | 00004880 |
| UH 12 | **A group of articles - web** | Fryers and French Fries Holders |

**1** **All-stainless steel bathtub**

long life
resistance of AISI 304 stainless steel material
the material does not cut

- savings on service interventions
- easy cleaning and maintenance of equipment

**2** **Degree of protection of the control elements IPX4**

maintenance-free system
resistance to splash water
long life

- savings on service interventions
- easy cleaning and maintenance of equipment



RM GASTRO, s.r.o.,
Třída Čs. armády 816,
391 81 Veselí nad Lužnicí 1, ID:49825062

# Technical data sheet

Technical parameters

| Chip scuttle heated from bellow 230 V / 1N | | |
|---|---|---|
| **Model** | **SAP Code** | 00004880 |
| UH 12 | **A group of articles - web** | Fryers and French Fries Holders |

1. **SAP Code:**
   00004880
2. **Net Width [mm]:**
   268
3. **Net Depth [mm]:**
   351
4. **Net Height [mm]:**
   231
5. **Net Weight [kg]:**
   6.00
6. **Gross Width [mm]:**
   310
7. **Gross depth [mm]:**
   450
8. **Gross Height [mm]:**
   330
9. **Gross Weight [kg]:**
   7.00
10. **Device type:**
    Electric unit
11. **Construction type of device:**
    Table top
12. **Power electric [kW]:**
    0.350
13. **Loading:**
    230 V / 1N - 50 Hz
14. **Protection of controls:**
    IPX4
15. **Indicators:**
    operation and warm-up
16. **Cross-section of conductors CU [mm²]:**
    0,5



RM GASTRO, s.r.o.,
Třída Čs. armády 816,
391 81 Veselí nad Lužnicí 1, ID:49825062